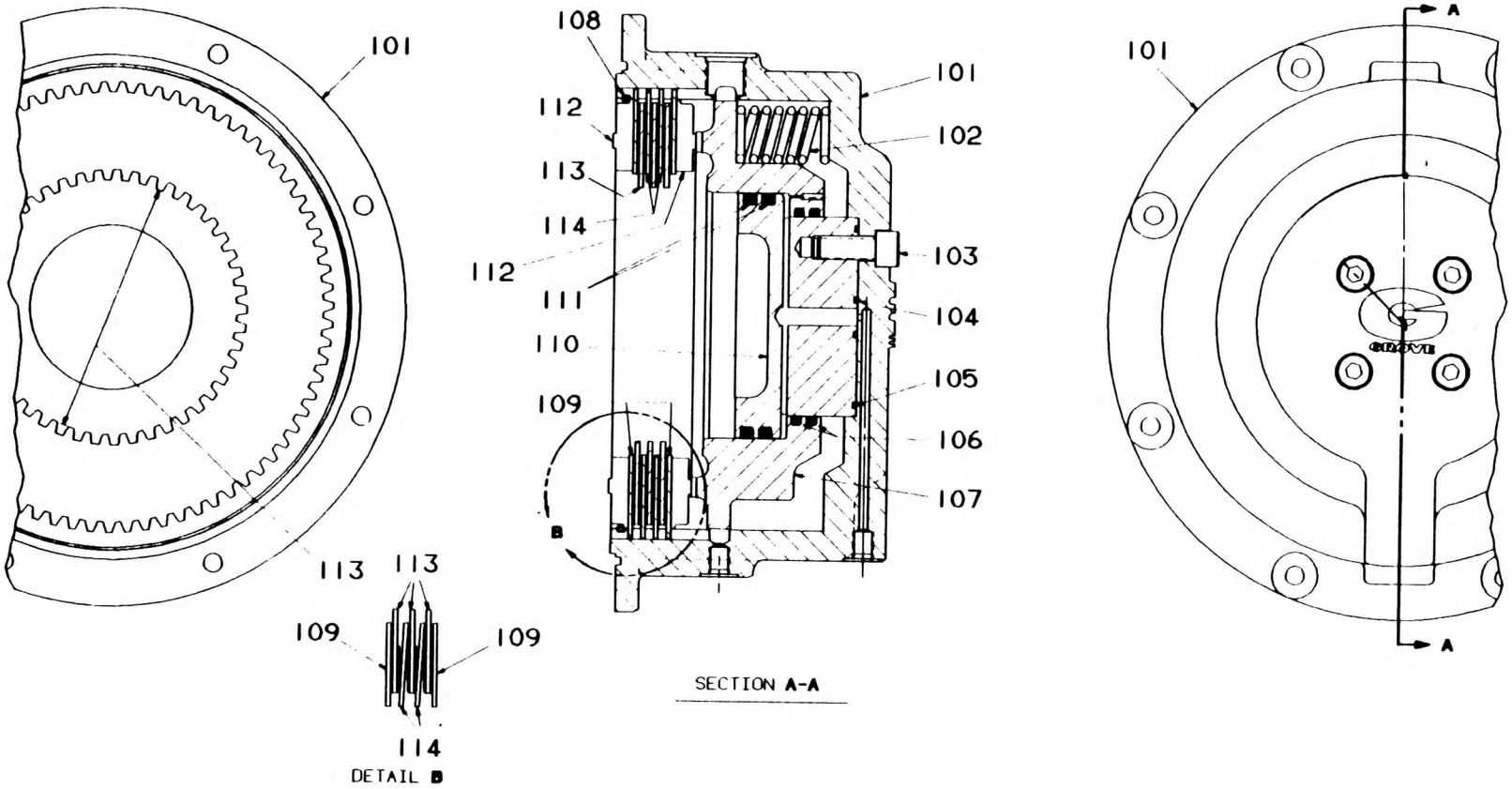
101
108
112
113
114
112
111
110
109
B
101
102
103
104
105
106
107
113
113
109
109
114
DETAIL B
SECTION A-A
101
A
A

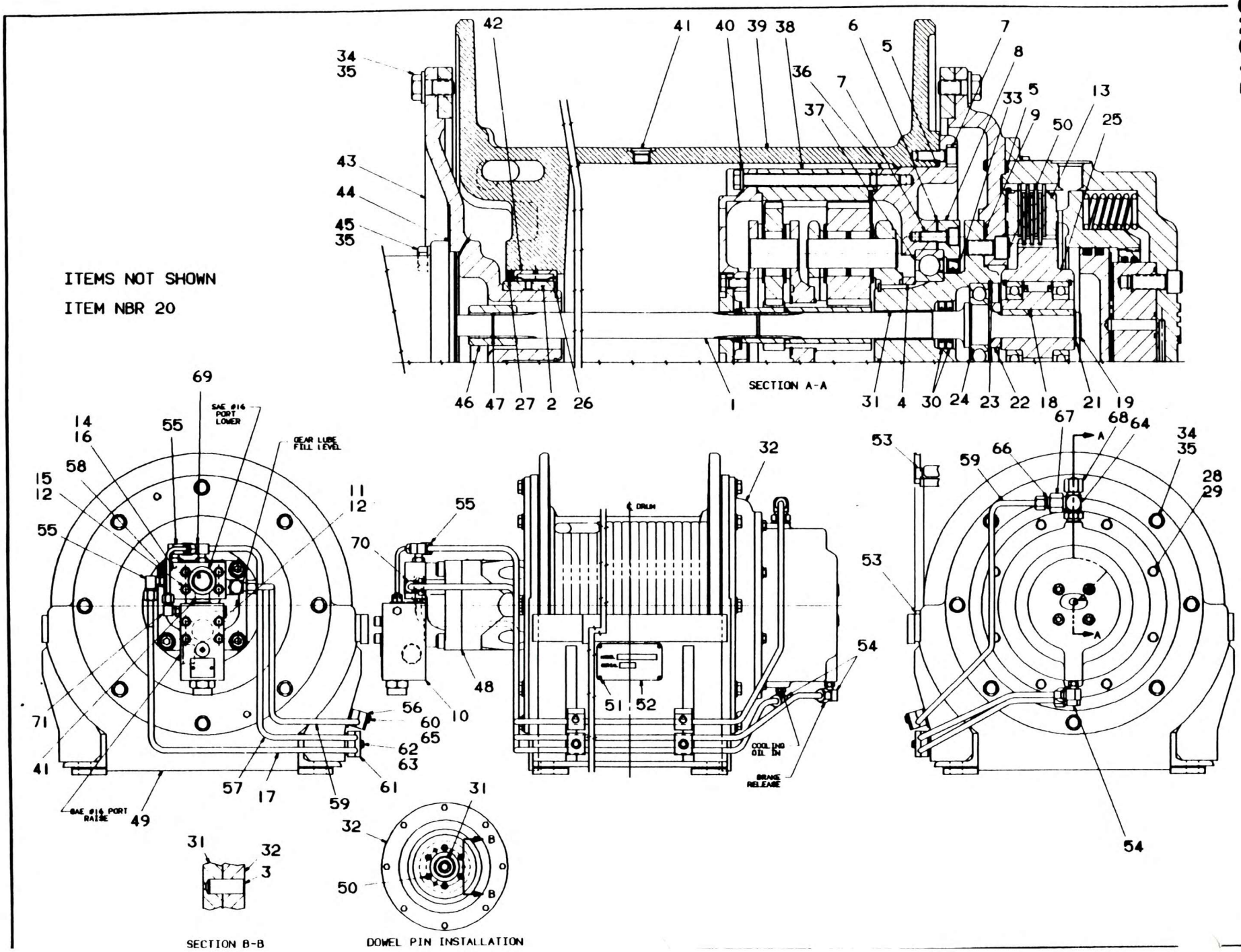
ITEMS NOT SHOWN
ITEM NBR 20
SECTION A-A
SAE #16 PORT LOWER
GEAR LUBE FILL LEVEL
SAE #16 PORT RAISE
DRUM
COOLING OIL IN
BRAKE RELEASE
SECTION B-B
DOWEL PIN INSTALLATION